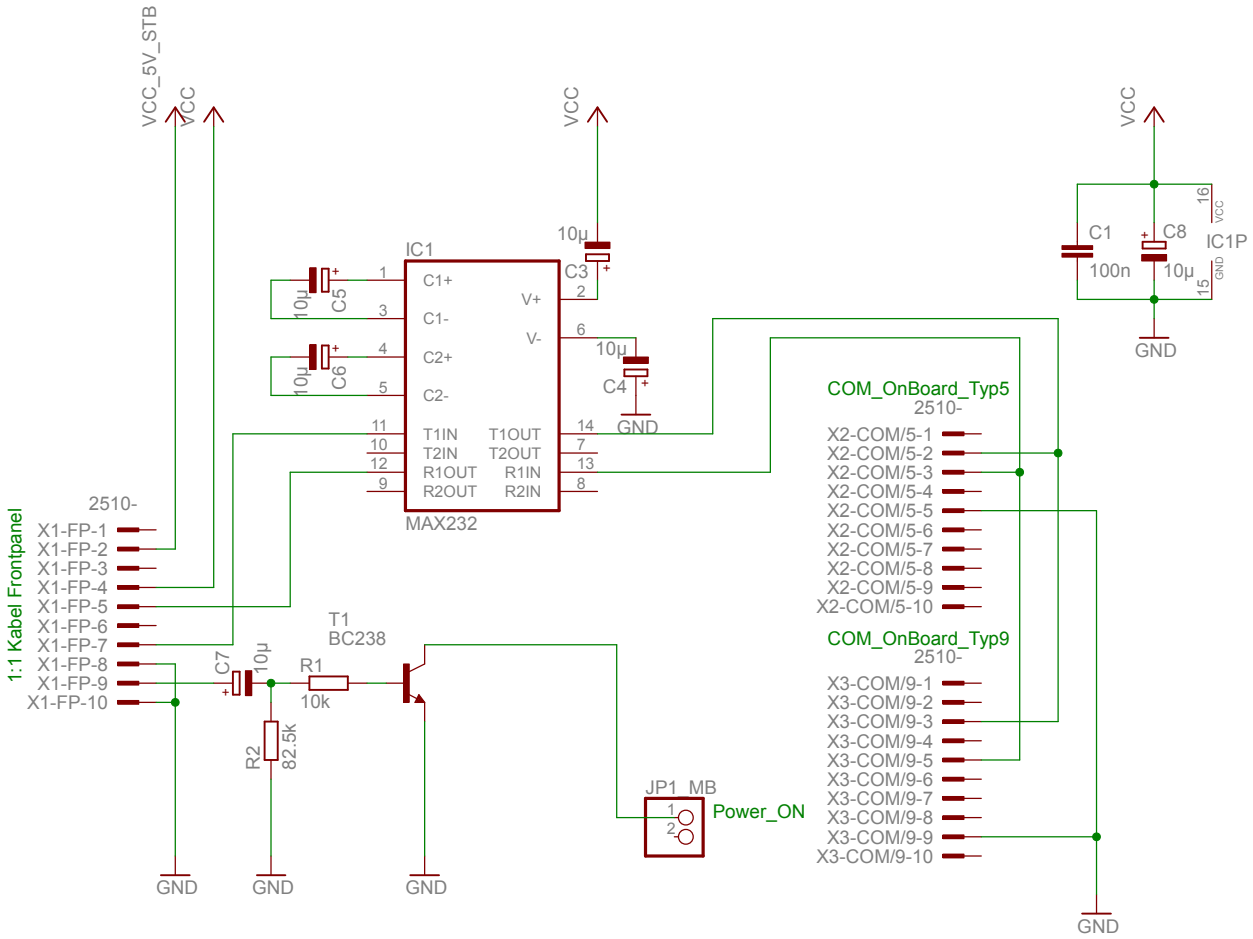
VCC_5V_STB
VCC
VCC
VCC
IC1
C1+
C1-
C2+
C2-
V+
V-
T1IN
T2IN
R1OUT
R2OUT
T1OUT
T2OUT
R1IN
R2IN
MAX232
C5
10µ
C6
10µ
C3
10µ
C4
10µ
GND
C1
100n
C8
10µ
IC1P
VCC
GND
2510-
1:1 Kabel Frontpanel
X1-FP-1
X1-FP-2
X1-FP-3
X1-FP-4
X1-FP-5
X1-FP-6
X1-FP-7
X1-FP-8
X1-FP-9
X1-FP-10
C7
10µ
R1
10k
R2
82.5k
T1
BC238
JP1_MB
Power_ON
COM_OnBoard_Typ5
2510-
X2-COM/5-1
X2-COM/5-2
X2-COM/5-3
X2-COM/5-4
X2-COM/5-5
X2-COM/5-6
X2-COM/5-7
X2-COM/5-8
X2-COM/5-9
X2-COM/5-10
COM_OnBoard_Typ9
2510-
X3-COM/9-1
X3-COM/9-2
X3-COM/9-3
X3-COM/9-4
X3-COM/9-5
X3-COM/9-6
X3-COM/9-7
X3-COM/9-8
X3-COM/9-9
X3-COM/9-10
GND
GND
GND
GND